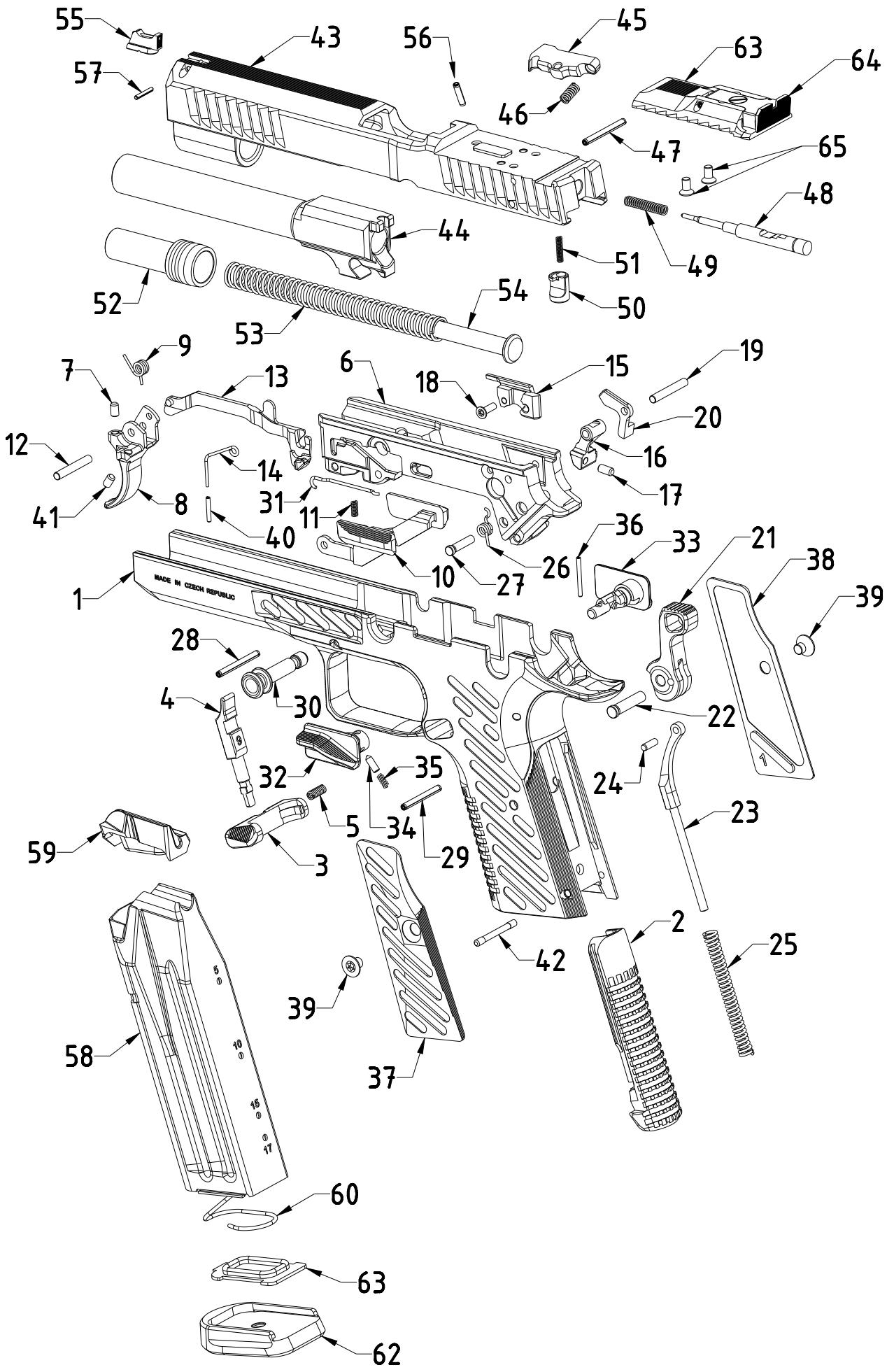
55
43
56
45
63
64
57
46
47
65
48
44
51
49
52
54
50
53
9
7
13
6
18
15
19
20
12
14
16
17
41
8
31
11
40
36
33
21
38
10
27
26
1
MADE IN CZECH REPUBLIC
39
28
30
4
22
32
35
24
5
34
23
59
3
29
2
42
25
39
58
37
60
63
62